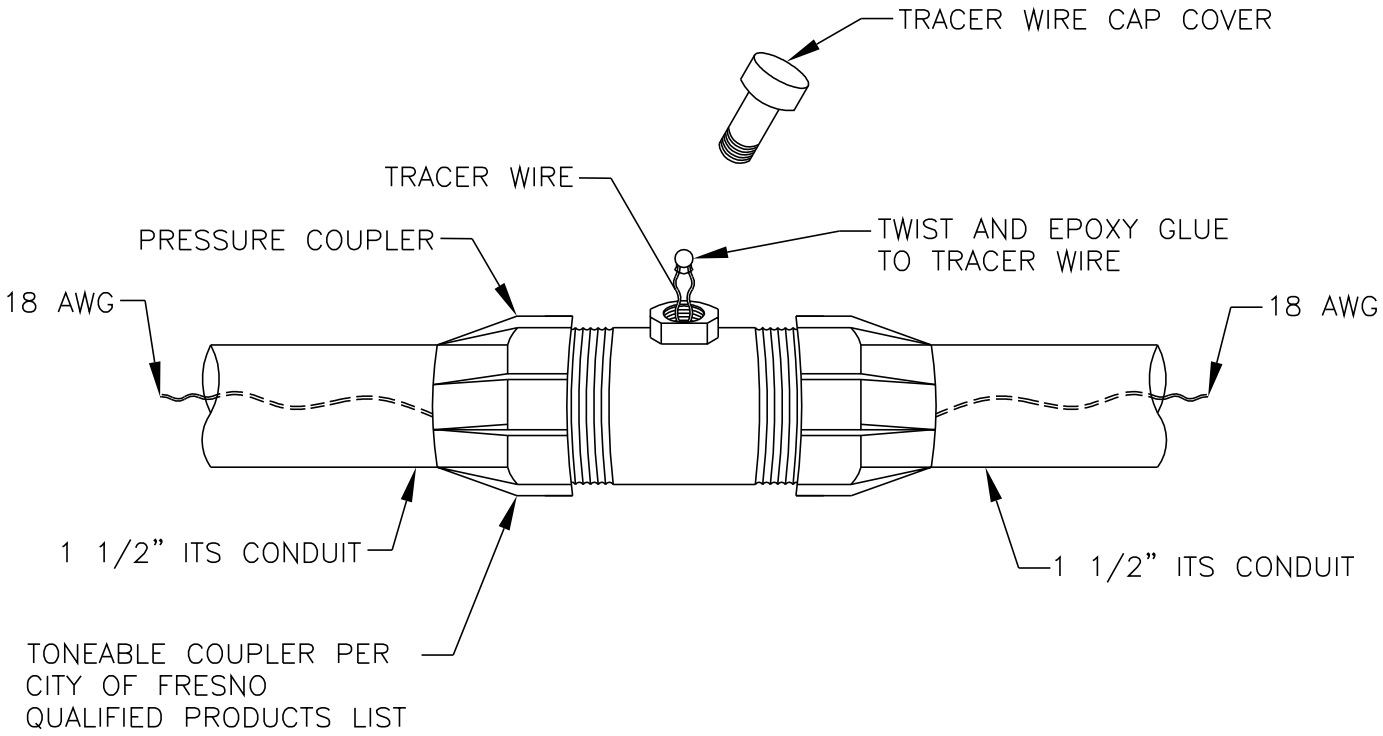

NOTES:

1. ALL COUPLER TRACER CAPS SHALL BE SEALED W/ WATER PROOF SEALER (SCOTCHCOAT) OR APPROVED EQUAL.

TONABLE T-LOC COUPLING	REF. & REV. FEB 08	CITY OF FRESNO ITS-19