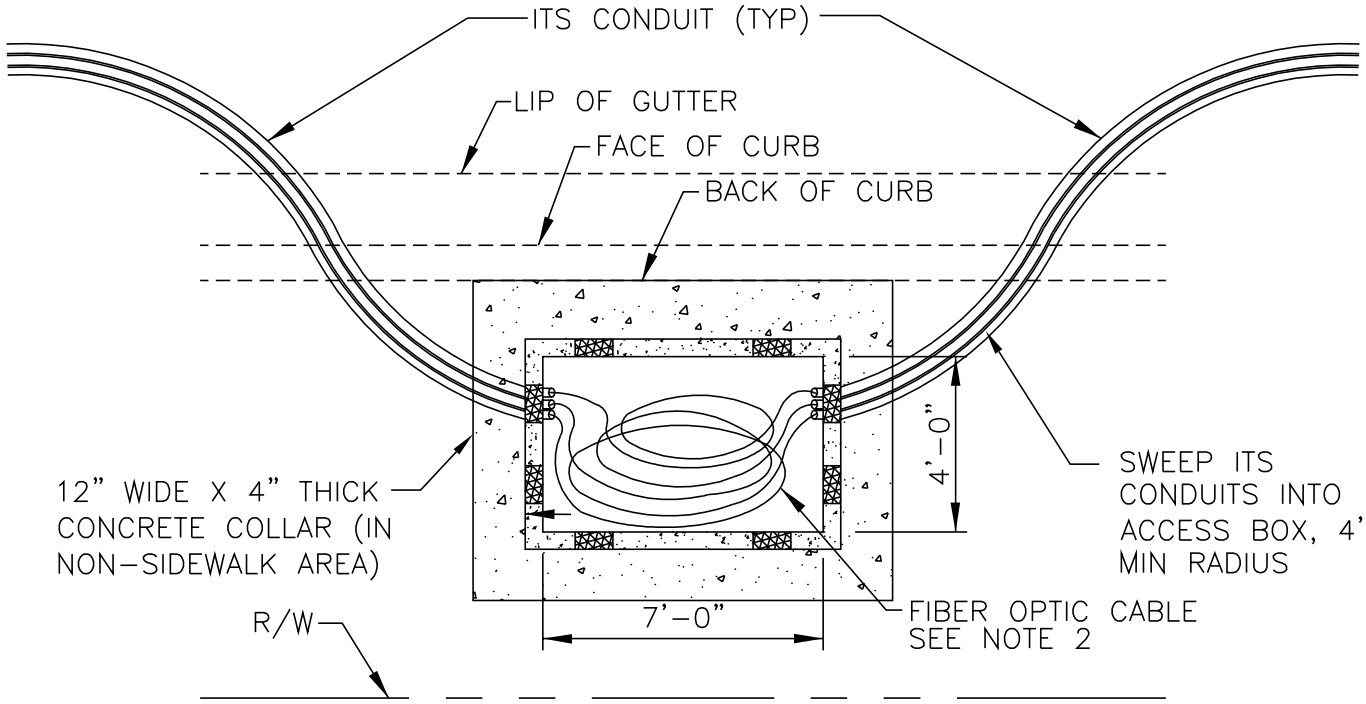

PLAN VIEW

NOTES:

1. TOP THREE CONDUITS NOT SHOWN FOR CLARITY.
2. COIL APPROXIMATELY 300 FEET OF FIBER OPTIC CABLE AROUND INSIDE BASE OF COMMUNICATIONS VAULT VERTICALLY WITH A MINIMUM DIAMETER OF 32". (ATTACH TO HOLD DOWNS WITH METAL TIE WRAPS) PER SPECIFICATIONS.
3. 90° CONDUIT ENTRIES ARE NOT ALLOWED. CONDUIT SHALL BE DIRECTLY ACROSS FROM ADJACENT CONDUITS.
4. LABEL ALL CABLE IN PULL BOX & SERVICE BOX.
5. VAULT SHALL HAVE A TORSION SUSPENDED & SPRING LOADED LID WITH TWO HOLDUP BRACING BARS.
6. VAULTS SHALL INCLUDE BOLT DOWN LIDS.
7. LABELING ON LID SHALL READ "ITS COMMUNICATIONS".
8. VAULTS SHALL BE PER CURRENT CITY OF FRESNO QUALIFIED PRODUCTS LIST (QPL).
9. FOR ADDITIONAL 4' X 7' VAULT DETAILS, SEE STD PLAN ITS-14.

ITS 4' X 7' VAULT DETAILS NO. 1	REF. & REV. FEB 08	CITY OF FRESNO ITS-13