NOTE:

SERVICE CABINET SHALL BE TESCO 27-000 LBS METERED/UNMETERED OR APPROVED EQUAL.

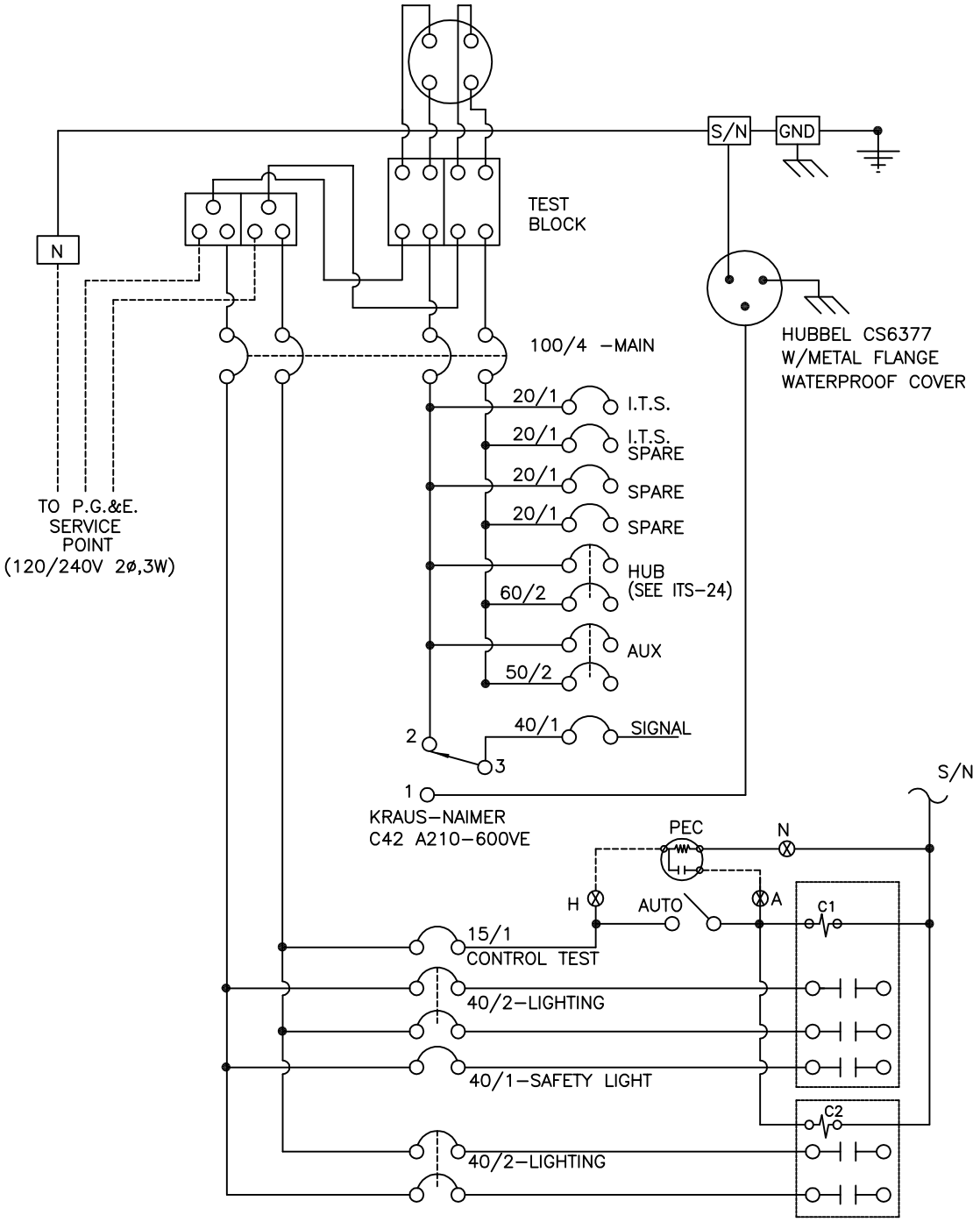

SERVICE PEDESTAL SCHEMATIC

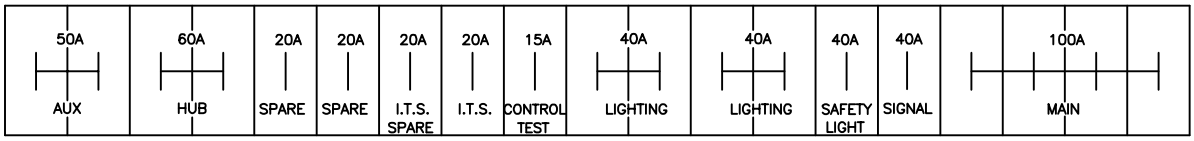

SWITCH LOCATION

ITS HUB CABINET SERVICE PEDESTAL SCHEMATIC	REF. & REV. FEB 08	CITY OF FRESNO ITS-26